□□□ □□□□

5 □□□□□

[illegible]

1. [illegible] .

2. [illegible]

3. [illegible] + [illegible]

[illegible]

1. [illegible]

(1) [illegible]

(2) [illegible]——[illegible].

(3) [illegible].

2. [illegible]

[illegible]

[illegible] U [illegible] P [illegible]

[illegible] I [illegible] r([illegible] r). [illegible]

(1) [illegible]

(2) [illegible] U [illegible] U [illegible] ΔU [illegible] U [illegible] $\frac{P}{U}r$.

(3) [illegible]

[illegible]

ΔP [illegible] $I^2 r$ [illegible] $\frac{P^2}{U^2}r$ ① [illegible] r ② [illegible] I [illegible] U

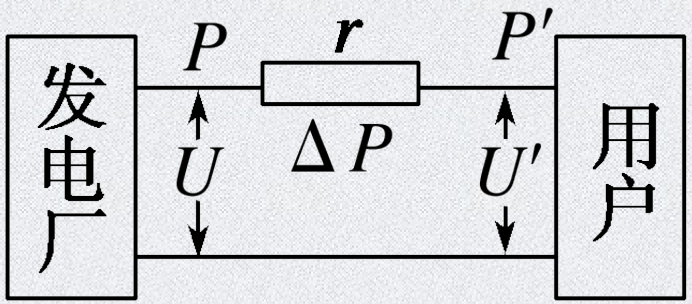

➢ [illegible]

① [illegible] $R_{[illegible]}$ [illegible] $R_{[illegible]}$ [illegible] $\rho\frac{l}{S}$ [illegible] $R_{[illegible]}$ [illegible] l [illegible]

[illegible] ρ

[illegible]________[illegible] S. [illegible]

② [illegible] I [illegible] P [illegible] UI [illegible]________

[illegible] [illegible]

[illegible]__________.

[illegible]

[illegible]___[illegible].

[illegible]

[illegible]

[illegible].[illegible]“[illegible]”[illegible] P [illegible] UI [illegible] P [illegible].[illegible]

3. [illegible]

(1) [illegible] U [illegible] U' [illegible]

ΔU [illegible] U_2-U_3 [illegible] ΔU [illegible] IR[illegible] [illegible] $\frac{P}{U}R$[illegible] .

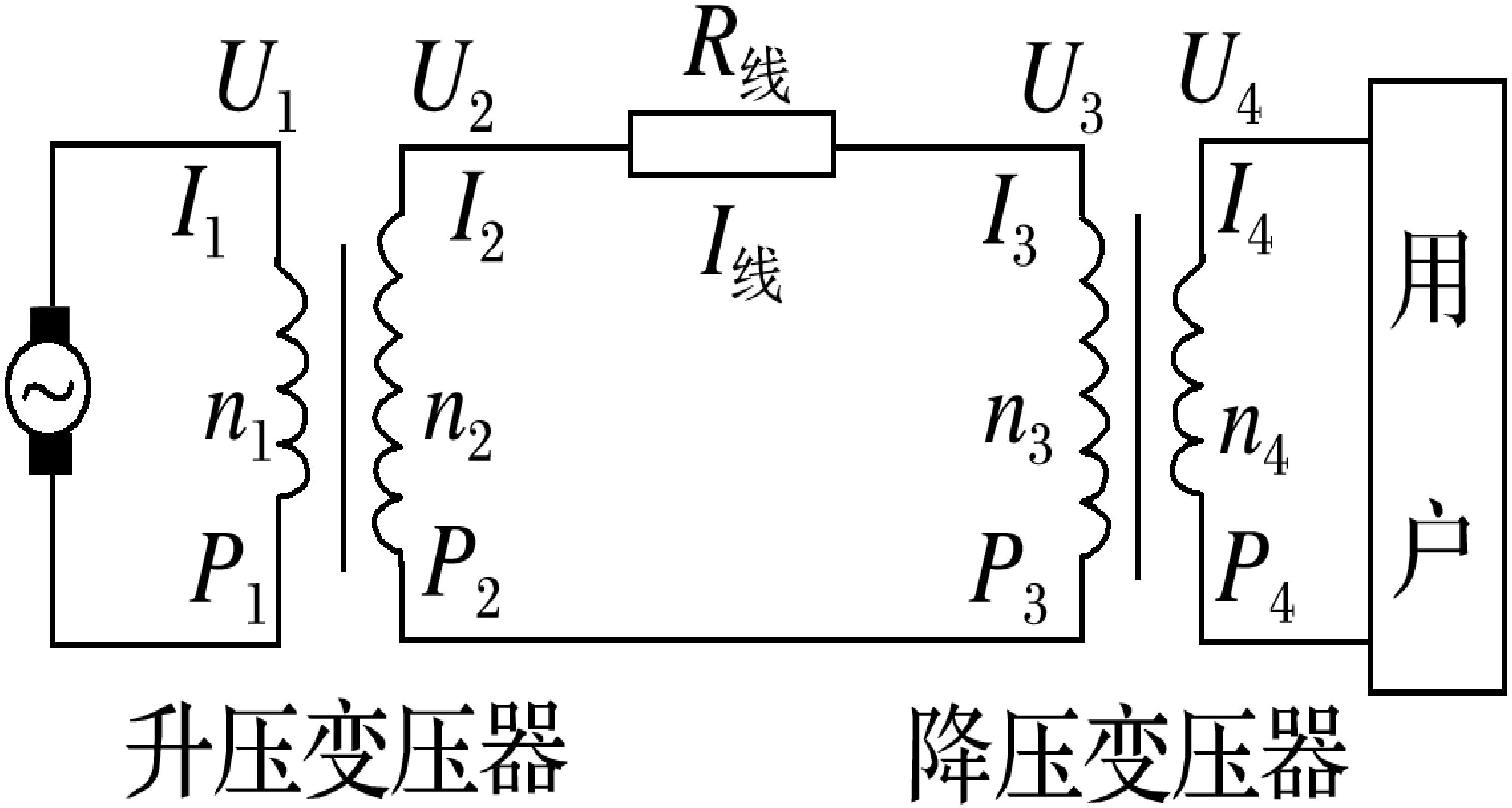

[illegible] U_1 [illegible] $R_{\square}$

[illegible] I [illegible] U_2 [illegible]

[illegible] (　　　　)

A. $\frac{U_1^{\,2}}{R_{\square}}$　　　　✓B. $\frac{(U_1 \square\ U_2)^2}{R_{\square}}$　　　　✓C. $I^2R_{\square}$　　　　✓D. $I(U_1 \square\ U_2)$

$P_{\square} \square\ I^2R \square\ \frac{\Delta U^2}{R} \square\ \Delta U \cdot I.$

1. □□□□□□

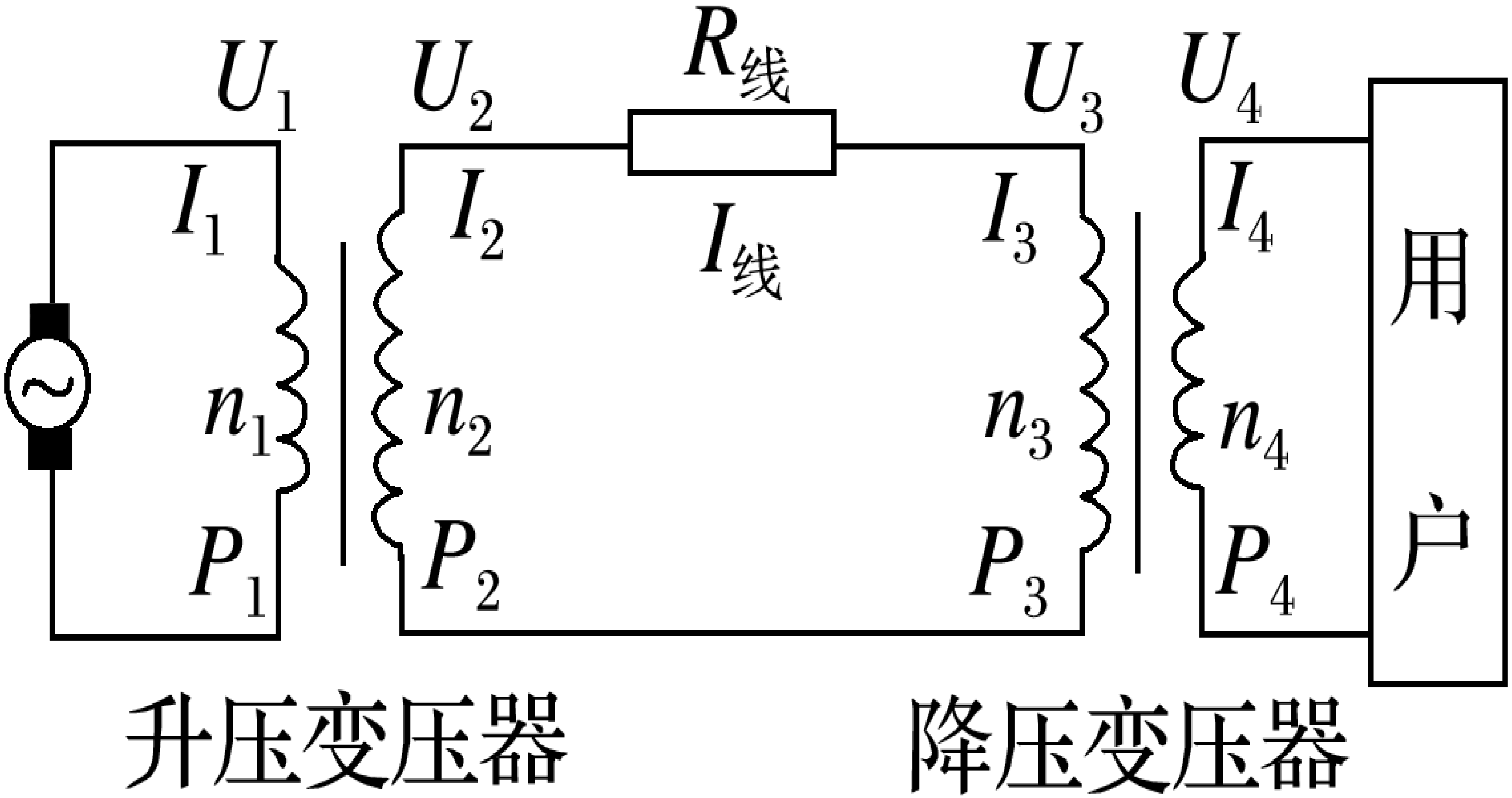

(1) □□□□

P_1 P_2 □ P_3 P_4 □ P_2

(2) □□□□□□□

$\frac{U_1}{U_2}$□$\frac{n_1}{n_2}$□$\frac{I_2}{I_1}$□$\frac{U_3}{U_4}$□$\frac{n_3}{n_4}$□$\frac{I_4}{I_3}$→□□□□□

U_2□ U□U_3□I_2□ $I_{□}$→□□□□□□□□□□□□

(3)□□□□□□□$I_{□}$□ $\frac{P_2}{U_2}$□$\frac{P_3}{U_3}$□$\frac{U_2 □ U_3}{R_{□}}$.

(4)□□□□□□□□□□□ΔP□$\Delta U I_{□}$□$I_{□}^2 R_{□}$□$\left(\frac{P_2}{U_2}\right)^2 R_{□}$.

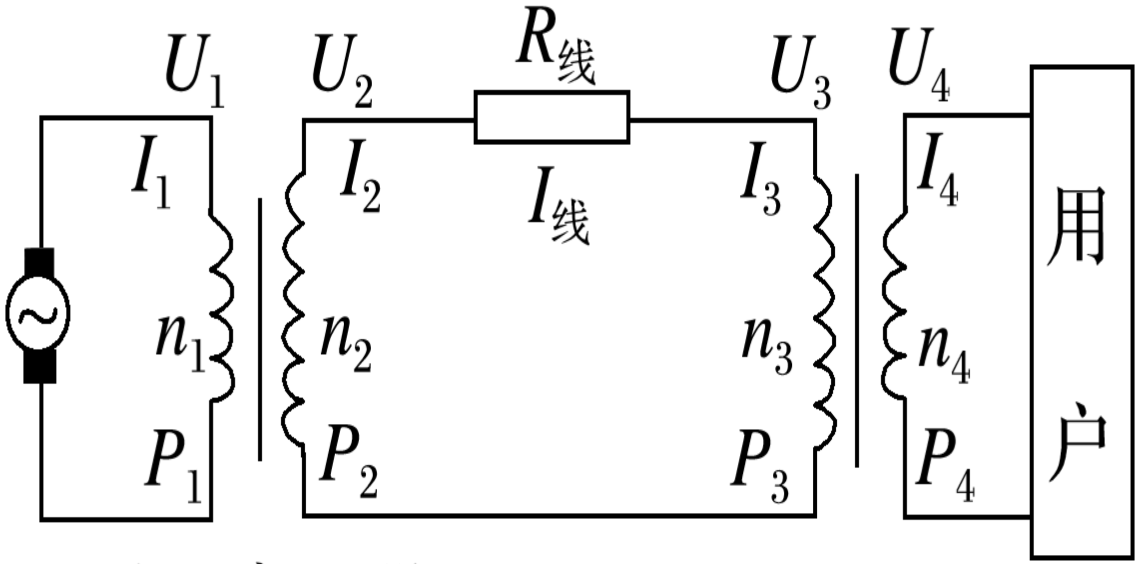

[illegible]

(1)[illegible] ΔU[illegible] $I_{[illegible]}R_{[illegible]}$ [illegible] ΔP[illegible] $I_{[illegible]}^{2}R_{[illegible]}$.

(2)[illegible][illegible].

□□□□□□□□□□□□□□ 4 000 kW □□□□□□ 4 000 V □□□□□ T_1 □□□□□□□□. □□□□□□□ R □ 1 kΩ. □□□□□□□□ T_2 □□□□□□□□□□□□□□□ (220 V □ 60 W). □□□□□□□□□□□□□□□□□□□□□ 10% □□□□ T_1 □ T_2 □□□□□□□□□□□□□□□□□□□□□ (　　　)

A. T_1 □□□□□□□□□□ 10^3 A □ 20 A √

B. T_2 □□□□□□□□□□ 1.8×10^5 V □ 220 V √

C. T_1 □ T_2 □□□□□□□ 1:50 □ 40:1
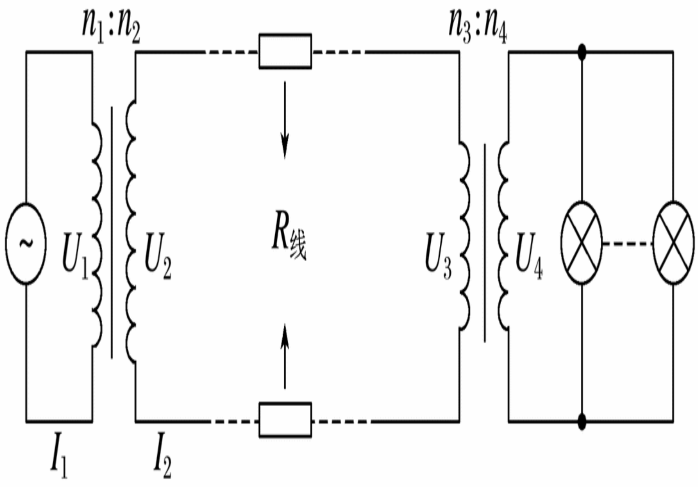
D. □ 6×10^4 □□□ (220 V □ 60 W) □□□□ √